Installation Requirements

EnGen™-2500

For field test installations in the ene.field* project

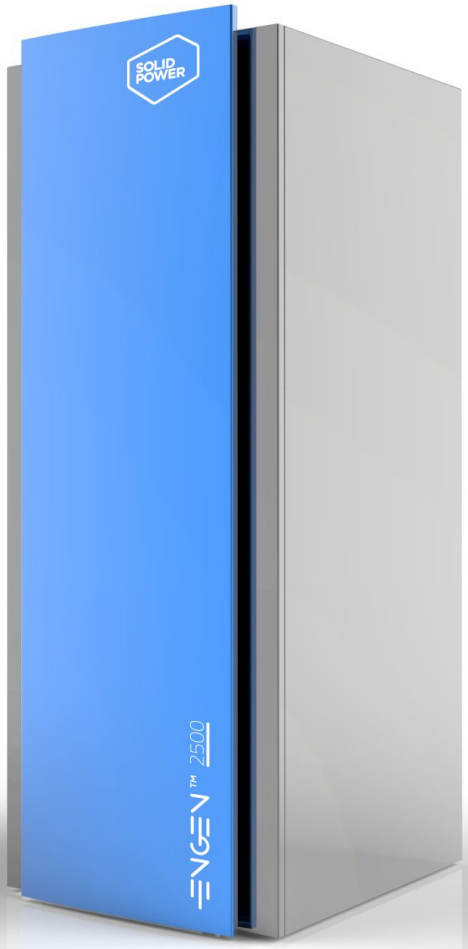

*The ene.field project is aimed at the dissemination of fuel cell m-CHPs. The ene.field systems are CE certified and installed for field test purposes.

CONTENTS

1. **Description of the supply**
2. **Technical specifications**
3. **Installation requirements**
   - 3.1. **Installation site**
   - 3.2. **Connections**
   - 3.3. **Exhaust fumes and condensation water discharge**
   - 3.4. **Safety**
4. **List of the main parameters monitored**

1. DESCRIPTION OF THE SUPPLY

Designed and produced by SOLIDpower S.p.A., EnGen™-2500 is a micro-cogenerator [mCHP] based on the technology of Solid Oxide Fuel Cells (SOFC), which enables production of thermal and electrical energy in distributed mode.
With electrical output of 2.5 kWe, the EnGen™-2500 mCHP is designed for residential and small-scale commercial uses. Higher power outputs can by obtained by installing multiple units. The EnGen™-2500 unit can be easily integrated with the existing heating plant, also in combination with renewable energy production systems.
The single EnGen™-2500 micro-cogeneration unit, which will be supplied with the CE mark, makes it possible to produce 2.5 kW of electricity with efficiency rates of 50% and overall cogeneration efficiency of 90%. The wide range of modulation [30-100%] guarantees operation according to the user's actual electricity and heating needs.
The system is supplied with the instrumental equipment necessary to ensure safe operation.

2. TECHNICAL SPECIFICATIONS

The table below gives the main technical and operational characteristics (nominal values) of the EnGen™-2500 m-CHP.

Nominal electric power [kW]	2.0 - 2.5
Modulation range (SOL*) [%]	30 -100
Energy efficiency (AC LHV) [%]	50
Cogeneration efficiency** [%]	90
Maximum space requirement for the installation (l x p x h) [m]	1.2 x 1.5 x 1.8
Weight [kg]	350
Electrical connection	grid
Fuel	grid gas
Thermal cycles per year	~ 10
Recommended water storage volume [l]	300
Water temperature [°C]	30 - 70
Noise [dB[A]]	<50
Maintenance interval [y]	1

*Start of life
**Water temperature 30°C

3. INSTALLATION REQUIREMENTS [FOR EUROPE]

Installation must be carried out by professionally qualified and properly trained personnel in compliance with the requirements of the UNI and CEN standards, the legislation in force, and according to the indications of good practice.

3.1. INSTALLATION SITE

The installation site must have suitable technical and structural characteristics to allow:

- installation [according to the provisions of the legislation and the technical regulations];
- operation in normal working conditions;
- maintenance operations;
- removal as well as replacement of the equipment or parts of it;
- access in case of emergency.

The finished dimensions of the EnGen™-2500 mCHP unit are 0.63 x 0.83 x h1.70 m, with an overall weight of approximately 350 kg. We therefore recommend carefully checking and verifying the load-bearing capacity of the floor, the capacity of the lift systems to upper floors [hoists, lifts, etc.], as well as the accessibility to the installation room and floor, guaranteeing a minimum passage clearance [doors, stairs, hallways, etc.] of 0.8 m.

The space required by the EnGen™-2500 mCHP for on-site installation is 1.2 x 1.5 x h1.8 m. We recommend in any case guaranteeing a minimum room space of 2 x 3 x h2.5 m to allow for installing the unit and the related accessories [water storage tank, inverter, PLC, etc.], as shown in the layout plan below, given here as an example. In the event that the surface area available differs from the minimum measurements recommended, a specific verification is required.

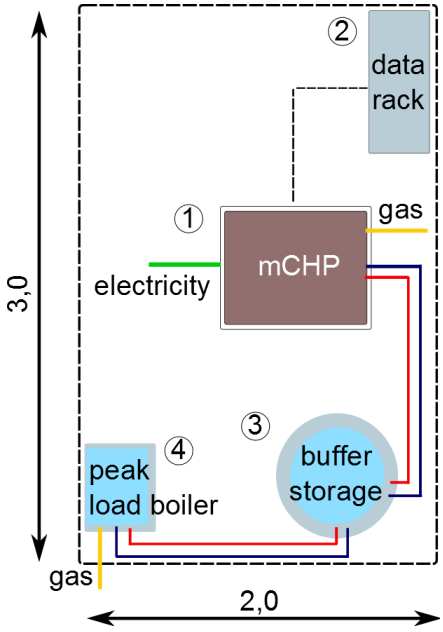

Layout example:

[1] EnGen™-2500 mCHP [2] electrical equipment
[3] buffer storage [4] peak boiler

3.2. CONNECTIONS

Gas connections

The EnGen™-2500 mCHP system operates directly with the grid gas at the normal supply pressure [20-25 mbar]; fuel gas supply systems must be suitably sized in compliance with the current regulations [UNI 7129] to guarantee the correct gas rate, and must be constructed according to the rules of good practice in compliance with the provisions of Italian Ministerial Decree 22/01/2008 n. 37.

Gas consumption in the rated operating conditions is 0.6 m^3/h.

Water connections

The heating plant of the EnGen™-2500 mCHP is supplied directly with water from water supply network. The connections to the water line must be made in a rational manner using the connections provided on the EnGen™-2500 mCHP. In the event of outdoor installations, it is advisable to use a chemical additive for frost protection. The drains of unit's safety valves are connected directly to the sewer line.

Electrical connections

The electrical system must be adequate for the maximum power absorbed by the unit [single-phase approx. 150 W]. Power is supplied to the EnGen™-2500 is from the power grid, 230V single-phase. The energy produced by the battery in direct current is transformed into alternating

current by means of an external inverter mounted on the wall with overall dimensions of 0.33 x 0.13 x h0.56 m.

Connection to the remote control system

The EnGen™-2500 mCHP system must be reachable remotely for monitoring the cogenerator control parameters. For this reason it is necessary to guarantee GPRS 2G/3G coverage.

3.3. EXHAUST FUMES AND CONDENSATION WATER DISCHARGE

The products of combustion are similar to those of a traditional combustion boiler. The flues and chimneys for discharging the exhaust fumes must comply with the requirements of the UNI 11071 standard and the provisions of Italian Ministerial Decree 13/07/2011. They must also comply with the outlet height and the distance from technical rooms required by the technical regulations in force.

For discharging the condensation water produced by the EnGen™-2500 mCHP, it must be connected to the sewer line in compliance with the national and local regulations for wastewater discharge. The condensation collection system must comply with the requirements of the UNI 11071 standard.

3.4. SAFETY

In compliance with the IEC EN 62282-3-3 standard, where required, the installation site must be equipped with the following safety devices:

- gas detector;
- NC safety solenoid valve positioned on the natural gas supply line, where required;
- accessible shut-off valve with manual operation installed upstream from the system.

The water line of the heating plant must comply with the safety requirements of the UNI 10412-1 standard.

In the absence of natural ventilation with the outdoor environment, the ventilation and/or aeration of the installation room must comply with the requirements of the UNI 7129 and IEC EN 62282-3-3 standards.

4. LIST OF THE MAIN PARAMETERS MONITORED

The majority of the sensor devices of the EnGen™-2500 mCHP are managed by a remote control unit, which is also used for managing and sending data via a protected Internet connection. The main values measured, as a guideline, are those listed below and shown in the diagram enclosed.

Gas consumption of the mCHP and the auxiliary boiler **[m^3/h]**

Electrical energy produced by the mCHP, total consumed and net metered by the user **[kWh]**

Output thermal energy from the mCHP, produced by the auxiliary boiler and total consumed **[kWh]**

Indoor and outdoor ambient temperatures **[°C]**

For a precise and detailed list of parameters and the related sensors, consult the specific project for each individual installation.

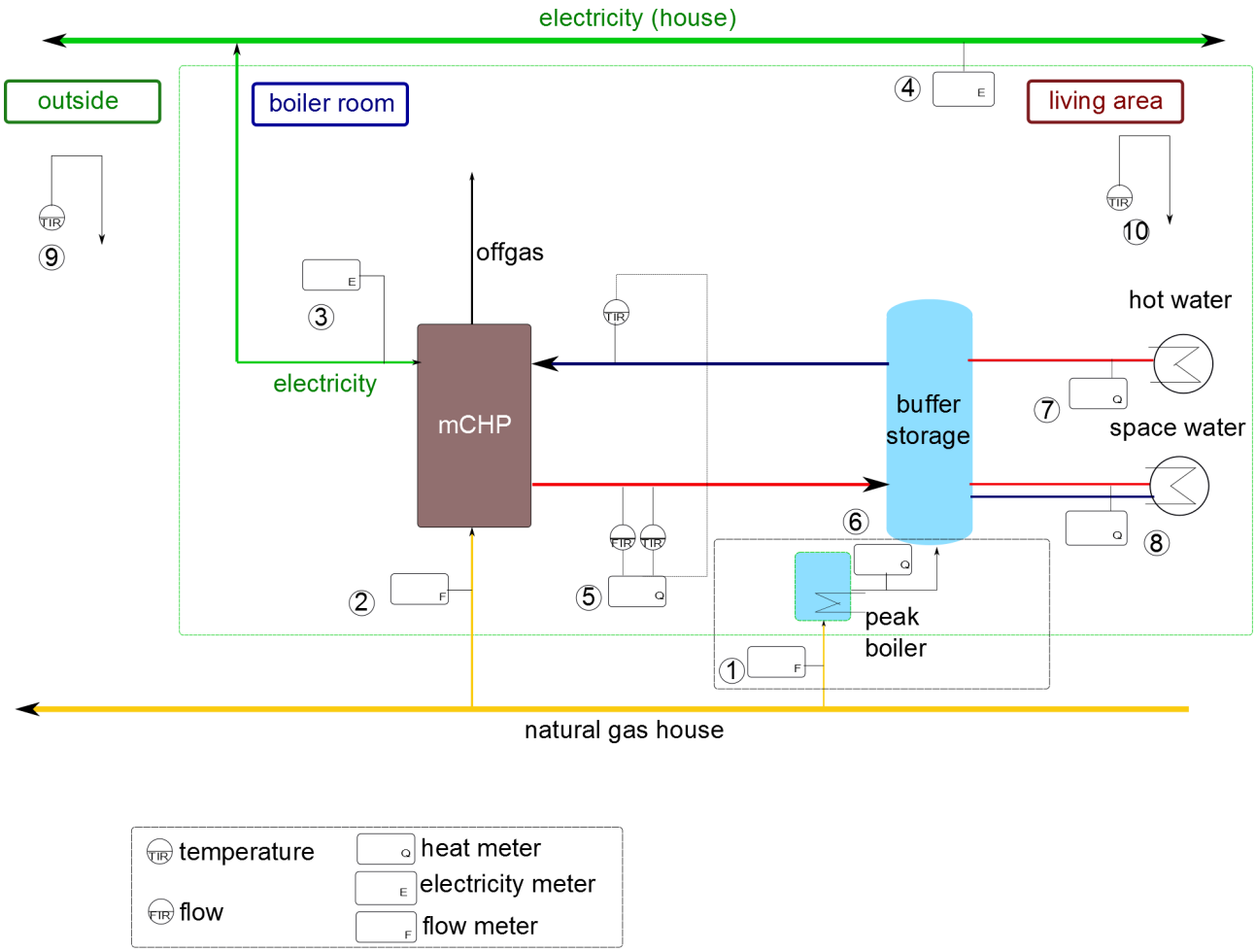

Example diagram of the monitoring sensors:

[1]-[2] flow meter, [3]-[4] electricity meter, [5]-[6]-[7]-[8] heat meter, [9]-[10] temperature probe